MASTERVOLT

USERS MANUAL

WHISPER 3.5M

- 3000 RPM -

Marine diesel generating set 230V / 50Hz

MasterBus controlled

Art.nr. 50261131

MASTERVOLT
Snijdersbergweg 93,
1105 AN Amsterdam
The Netherlands
Tel.: +31-20-3422100
Fax.: +31-20-6971006
www.mastervolt.com

V6. December 2009

This manual applies to the Mastervolt Whisper 3.5 Marine Diesel Generating set controlled by MasterBus first launched in May 2008. For earlier models refer to other manuals available on our website: www. mastervolt.com

Original instructions	Originalbetriebsanleitung	Manual original
Oorspronkelijke gebruiksaanwijzing	Notice originale	Istruzioni originali

Copyright © 2009 Mastervolt. All rights reserved.
Reproduction, transfer, distribution or storage of part or all of the contents in this document in any form without the prior written permission of Mastervolt is prohibited.

TABLE OF CONTENTS:

1 INTRODUCTION 4
1.1 General 4
1.2 Service and maintenance 4
1.3 Guarantee 4
1.4 Liability 5
1.5 Identification 5
1.5.1 Identification plate 6

2 INFORMATION 7
2.1 Safety 7
2.1.1 General 7
2.1.2 Electrical safety 7
2.1.3 Earth insulation failures 7
2.1.4 Installation 7
2.1.5 Operation 8
2.1.6 Fire and explosion 8
2.1.7 Chemicals 8
2.2 Transport, lifting and storage 9
2.3 The Whisper 3.5 9
2.3.1 Features 9
2.3.2 Remote control panel 9
2.3.3 Documentation 9
2.3.4 Accessories included in the standard delivery 9
2.4 Components 10
2.4.1 Main components to identify 10
2.4.2 Local control panel 11
2.4.3 MasterView Easy remote control panel 11
2.5 Technical Information 11
2.5.1 AC alternator 11
2.5.2 Engine 11
2.5.3 Control system 11
2.5.4 Battery charger 12
2.5.5 Alarms and shut down 12
2.5.6 Fuel specification 12
2.5.7 Oil information 12
2.5.8 Technical data 13
2.5.9 DC wiring diagrams 14

2.5.10 Wiring names and colours ... 16
2.5.11 AC wiring diagram 230 V AC / 50 Hz ... 17

3 OPERATION ... 18
3.1 General ... 18
3.2 Operating Instructions ... 18
3.2.1 Summarised operating instructions (daily use) ... 18
3.2.2 Extended operating instructions ... 19

4 MAINTENANCE ... 21
4.1 Alternator ... 21
4.2 Engine ... 21
4.2.1 Preliminary instructions ... 21
4.2.2 Bleeding fuel lines ... 21
4.2.3 Valve clearance ... 21
4.2.4 Replacing fuel filter ... 22
4.2.5 Cleaning oil strainer ... 22
4.3 Regular maintenance ... 22
4.3.1 Maintenance schedule ... 23
4.3.2 Putting out of service ... 23

5 TROUBLE SHOOTING ... 24
5.1 Alternator/ electrical faults ... 24
5.1.1 General ... 24
5.1.2 Failure or warning messages displayed on the remote control panel ... 25
5.1.3 Other electrical problems ... 26
5.2 Engine faults ... 27
5.2.1 General ... 27
5.2.2 Failure or warning messages displayed on the remote control panel ... 27
5.2.3 Other engine related problems ... 28
5.2.4 Warnings ... 30
5.2.5 Service address ... 30
5.3 Special procedures alternator ... 31
5.3.1 Residual voltage check / excitation procedure ... 31
5.3.2 Testing rotary rectifier diodes ... 31
5.3.3 Winding resistant values ... 31
5.3.4 Meggering ... 31
5.4 Special procedures engine ... 32
5.4.1 Setting the RPM ... 32
5.4.2 Tightening torques ... 32
5.4.3 Measuring exhaust backpressure ... 32
5.4.4 Disassembling instructions ... 33

6 SPARE PARTS LIST ... 34

MAINTENANCE LOG ... 36

1 INTRODUCTION

1.1 GENERAL

The Whisper 3.5 Marine Diesel Generating set is manufactured and marketed by Mastervolt.
It is important to read this manual before installing and operating the generating set. Both safety and durability rely very much on the correct identification, installation and a good understanding of ratings, features, design, maintenance and operation procedures.
The information, specifications, illustrations and statements contained within this publication are given with our best intentions and are believed to be correct at the time of going to press.

All of the specifications, provisions and instructions contained in this manual apply solely to standard versions of the Mastervolt Whisper 3.5 generating set.
This manual is valid for the following models:

Part number	Version	Description
51200500	A	Whisper 3.5 / 230V 3000rpm wet exhaust, MasterBus controlled
51200506	A	Whisper 3.5 / 230V 3000rpm wet exhaust, MasterBus controlled - ungrounded

See 1.5 for identification of the generator set. For other models see other manuals available on our website: www.mastervolt.com

Our policy is one of continued development and we reserve the right to amend any technical information with-out prior notice.
Whilst every effort is made to ensure the accuracy of the particulars contained within this publication neither the manufacturer, distributor, or dealer in any circumstances shall be held liable for any inaccuracy or the consequences thereof.

WARNING
A warning symbol draws attention to special warnings, instructions or procedures which, if not strictly observed, may result in damage or destruction of equipment, severe personal injury or loss of life.

DANGER
This danger symbol refers to electric danger and draws attention to special warnings, instructions or procedures which, if not strictly observed, may result in electrical shock which will result in severe personal injury or loss of life.

1.2 SERVICE AND MAINTENANCE

Regular service and maintenance should be carried out according to the directions in this manual. For service and maintenance one can appeal to the manufacturer or the dealers.

1.3 GUARANTEE

Mastervolt guarantees that this generating set has been built according to good workmanship, according to the specifications in this manual and according to European Community safety regulations.

During production and prior to delivery, all of our generating sets are tested and inspected.

The functioning of this generating set is subject to guarantee. The period and conditions of this guarantee are laid down in the general conditions of delivery as registered with the Chamber of Commerce and Industries in Amsterdam number 33279951 and are available on request. Some aspects of our warranty scheme are given here in more detail: The guarantee period is two years, limited to 1000 running hours. Guarantee does not cover failures that are caused by misuse, neglect or a faulty installation.

Example 1. Faulty installation:
Seawater entering the engine is the most common cause of damage to combustion engines in boats. (Both to propulsion and generator engines.) The entry of water must be avoided under all conditions. Be aware that the conditions in blue water sailing can be extreme. Refer to the installation manual for instructions but remember these are for guidance only as many factors influence the installation of a generator. The ultimate responsibility will always be with the owner to ensure a safe and compliant installation. If in doubt ask!

DAMAGE CAUSED BY THE INGRESS OF WATER IS NEVER COVERED BY GUARANTEE

Copyright © 2009 Mastervolt / December 2009 / WHISPER 3.5 / EN

Example 2: Misuse:
Long term running with no load or too little load can cause the exhaust to get choked with soot or carbon. Cleaning the exhaust is not covered by guarantee.

Example 3: Neglect
Sometimes the seal of the raw water pump starts leaking. Mostly this begins with a little drip and slowly gets worse. Regular visual inspection of the generator is necessary to prevent damage to occur from a leaking water pump. When one find serious damage after weeks of neglect guarantee claims will not be honoured.

Example 4: Neglect
Whisper generators have an option for an auto start/stop mode or interval mode.
Mastervolt cannot be held responsible for damage caused by the unattended running generator.

Guarantee means that faulty parts are repaired or replaced free of charge. If necessary the whole generator unit will be exchanged. Labour necessary to complete repairs on board a vessel executed by an authorized service engineer is covered, but is limited to a reasonable number of hours and reasonable rates in relation to the actual repair work that has to be done.
Travel expenses and travel hours are not covered. Also not covered is the labour required to take a generator out of a boat or for reinstallation. There is no cover for labour needed to get access to the generator, for example to remove equipment or bulkheads etc.

Goods to be delivered under guarantee will be invoiced. Only after the faulty goods are returned will the invoice be credited. Payment in advance may be required or guaranteed by credit card. If after the faulty goods are returned, it is indicated that the failure was not covered by warranty a credit will not be issued. For example if a Printed Circuit Board is returned with clear damage caused by seawater, warranty will be refused.
Freight costs to deliver spares by normal mail or carriers is covered under warranty. Special services like express mail, overnight delivery etc. are not covered. Taxes and duties are not covered. For shipments to remote off shore areas any additional costs incurred over normal carriage will be invoiced to the customer.
The cost for returning faulty goods is not covered under warranty.

Additional agreements could be part of the contract of delivery.

If any problem arises which could be subject of guarantee, procedures should be followed as described in the guarantee certificate, unauthorised repairs could lead to further damage and violate the guarantee conditions.

Should work take place, which is not in accordance with the guidelines, instructions and specifications contained in this user's manual and the supplementary installation manual, then damage may occur and the generating set may not fulfil its specifications. In all these cases the guarantee may become invalid. Use original spareparts only!

1.4 LIABILITY

Mastervolt does not accept responsibility for damage, injuries or casualties which are the result of operation of the generating set in specific conditions which brings dangers which could not be foreseen, or could be avoided by additional measures. Mastervolt does not accept liability for damage due to use of the generator, possible errors in the manuals and the results thereof.

Mastervolt cannot be held responsible for damage caused by unattended running of the generator due to the use of *event based commands*

1.5 IDENTIFICATION

Before using this generating set it is very important to identify the set correctly. To communicate for service or ordering parts it is also essential to correctly identify the generating set. Also for the daily operation of the generating set it is necessary that the operator knows the correct specifications.

1.5.1 Identification plate

All required identification data are on the identification plate.

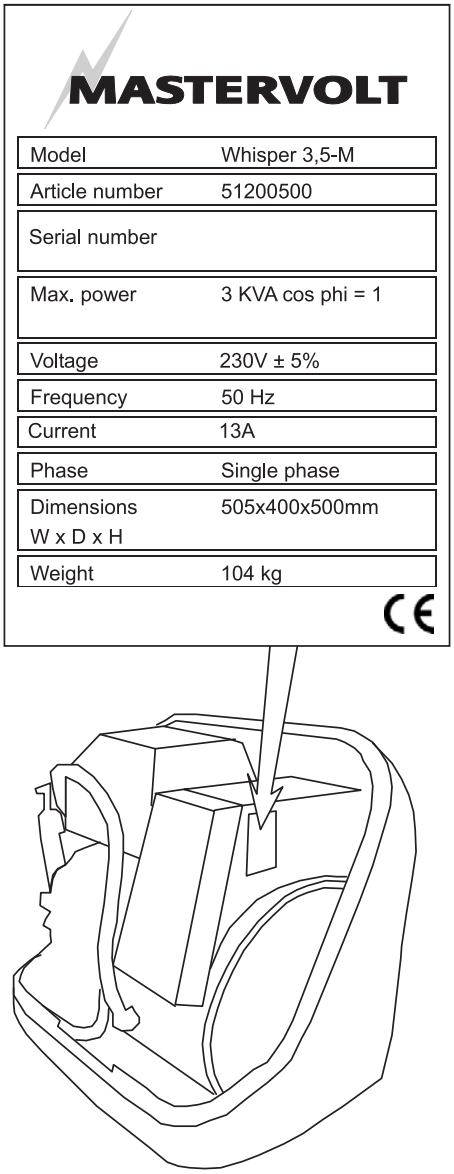

Fig. 1: Location identification plate.

1 The identity of the generating set is given by the SERIAL NUMBER.

Example:

SERIAL NO: : W822A001

version "A"

When this number is available the manufacturer can trace the specifications of the generating set. On the identification plate are also some basic features of the set:

2 POWER
The identification plate gives the nominal maximum continues load in kVA (= kW) calculated with power factor one. When calculating a load one should always take into account the power factor or cos phi of this load. The power should never exceed 3 kW. Power is rated at an ambient temperature of 40°C and a seawater temperature of 25ºC. For higher temperatures the generating set has to be derated.

3 VOLTAGE shows the nominal voltage.
This voltage should be within the specified tolerance at the nominal frequency.

4 FREQUENCY is shown in Hz and is determined by the speed of the engine (RPM). 50 Hz correlates with 3000 rpm, 60 Hz correlates with 3600 rpm.

5 CURRENT shows the maximum current that is acceptable at the specified frequency, voltage and power factor.

6 WEIGHT shows the net dry weight (approximately) in kg. This is without fuel, oil, packing and external installation equipment

7 The CE symbol shows that the generating set is build according to European Community safety regulations. This includes the regulations regarding the safety of pleasure craft, machinery, electric safety and electric magnetic compatibility (EMC) and other relevant directives.

Safety also relies on the installation, application and circumstances. See also the remarks in this manual under SAFETY

Before changing a factory setting you are advised to consult the manufacturer. When the generating set you have to identify is not new you have to take into account the possibility that former users may have changed the settings. Check the settings (voltage, frequency, rpm) when there is any doubt.

Copyright © 2009 Mastervolt / December 2009 / WHISPER 3.5 / EN

2 INFORMATION

2.1 SAFETY

2.1.1 General

When correctly installed and used in normal circumstances this generating set fulfils EC safety regulations. This generating set could be part of an installation or could be used in a way that additional regulations of the EC or other authorities have to be taken into account.

Circumstances could make it also necessary to take additional measures. Be aware of wet conditions and hazardous environments caused by explosive gases etc

2.1.2 Electrical safety

The voltage of 230 Volt generated by this generating set is dangerous and if instructions and procedures are not strictly observed may result in electrical shock which will result in severe personal injury or loss of life.

- Check all wiring at least once a year. Defects, such as loose connections, burned cables etc. must be repaired immediately.
- Do not work on the electrical system if it is still connected to a current source. Only allow changes in your electrical system to be carried out by qualified electricians.
- Connection and protection must be done in accordance with local standards.
- Using *event based commands* the generator can start unexpectedly. When working on the electrical system, the 30 Amp fuse must be removed from the Digital Diesel Control panel and the battery plus cable must be removed from the battery.

Warning signs indicate parts which could be live.

2.1.3 Earth insulation failures

According to local regulations and depending on the application it could be necessary to take measures for protection against earth insulation failures.
In the standard delivery “neutral” and “ground” are not connected. To make a connection between “neutral” and “ground” could be necessary as part of a specific insulation failure protection system.
Small pleasure craft in Europe is submitted to The Recreational Craft Directive 94/25/EC. The guidelines of this directive refer to (ISO 13297).
When the installation complies with this standard the “neutral” and “ground” should be connected on the generating set. (Refer to the electrical diagram, page 15)

In all situations the transfer switches between shore, inverter and generator should switch both neutral and L1. Of course this is the case when using a Mastervolt Mass Systemswitch.

Be aware that insulation protection systems can be different for different applications and even within the ship there could be different standards for different spaces. We did refer to the Recreational Craft Directive that applies to pleasure craft up to 24 m of length. Sometimes one has to comply with other standards such as the rules of certification societies like Lloyds Register of Shipping or Veritas, regulations for the protection of personal, building legislation, etc. It is of the greatest importance to have expert advice on this issue.

2.1.4 Installation

Whisper generating sets are not self contained and have to be properly installed in enclosed areas such as a machine room.

Installation includes measures to be taken to outlet exhaust fumes which contain carbon monoxide and are extremely dangerous. Carbon monoxide (CO) is an invisible odourless gas. Inhalation produces headache, nausea or death. Installation includes measures for proper ventilation, safe electric connections, safe installation of the starting battery, proper fitting of the cooling system and fuel pipes etc. Refer to the installation manual.

2.1.5 Operation

The Whisper 3.5 generating set does not have any external moving parts like fans and V-belts and therefore is very safe.

Nevertheless take note of the signs on the generating set which show symbols in a triangle indicating danger.

When service has to be carried out while the engine is running, be aware of moving parts like V-belts.

- The generating set should be operated by authorised personnel only.
- Be aware of hot parts and especially parts of the exhaust system and the cooling system.
- If the generating set is unsafe, fit danger notices and disconnect the battery positive (+) lead so that it cannot be started until the condition is corrected.
- Do not attempt to operate the generating set with a known unsafe condition. Disconnect the battery negative (-) lead prior to attempting any repairs or cleaning inside the enclosure.
- Always consult the manual before carrying out maintenance.
- Do not change the settings without consulting the manufacturer. Keep a record of setting changes in this manual.

2.1.6 Fire and explosion

Fuels can be flammable. Proper handling limits the risk of fire and explosion.

- Avoid refilling the fuel tank while the engine is running. When oil or fuel is leaking do not use the generating set.
- Do not run the engine close to explosives or gasses.
- Hydrogen gas generated by charging batteries is explosive. Ensure for proper ventilation. Do not smoke or allow sparks, flames, or other sources of ignition around batteries.
- Keep a fire extinguisher on hand.
- Poor electrical connections or using wiring which is not suited for the rated currents can cause overheating and possibly fire.

2.1.7 Chemicals

- Fuels, oils, coolants, and battery electrolyte can be hazardous to personnel if not treated properly. Do not swallow or have skin contact with these liquids. Do not wear clothing that has been contaminated by fuel or lubricating oil.
- Gaskets may be manufactured from asbestos. Particles of this material should not be inhaled as this may result in fatal diseases.
- On no account allow any unprotected skin to come into contact with the injector spray as the fuel may enter the blood stream with fatal results.
- Engines may be fitted with seals or O-rings manufactured from "viton" or similar material. When exposed to abnormal high temperatures in excess of 400°C an extremely corrosive acid is produced which cannot be removed from the skin. If signs of decomposition are evident, or if in doubt, always wear disposable heavy duty gloves.

Copyright © 2009 Mastervolt / December 2009 / WHISPER 3.5 / EN

2.2 TRANSPORT, LIFTING AND STORAGE

When lifting the generating set avoid any risk of personal injuries, do not stand un-der the generating set..

- Use soft slings to avoid damage
- Included in the delivery is a lifting eye, only to be used to take the generator out of the capsule. Do not use to lift the set including the capsule and certainly not including the steel foundation plate !
- After transporting the generating set check for damage before installation.
- Long term storage can have detrimental effects on engine and alternator. The engine should be put through an engine preservation procedure. (Refer to the maintenance chapter)
- The alternator windings tend to condense. To minimise condensation, store the generating set in a dry and warm storage area.
- After removing the generating set from long term storage perform an insulation check. (Refer to the alternator maintenance paragraph for procedures)
- While the battery is stored it should be recharged every 12 weeks.

2.3 THE WHISPER 3.5

2.3.1 Features

This generating set includes a diesel engine which is connected by close coupling to an alternator in a sound attenuated capsule. The set is mounted on a steel base frame and mounted securely on anti vibration mounting pads to the capsule base. All cables and hoses are guided through the capsule's left side. The set is not self contained and is only operable after proper installation using additional accessories and installation materials.
Installation accessories are listed in the installation manual and are available through the supplier of the generating set.
The generating set is compatible with MasterBus: a fully decentralized data network for communication between the different Mastervolt system devices such as the inverter, battery charger, generator, batteries and many more. Refer to the separate operating manual of the MasterView Easy for details

2.3.2 Remote control panel

The generating set as well as the rest of the electrical system can be monitored and controlled by any MasterBus compatible remote control panel. The MasterView Easy is a MasterBus compatible monitoring and control panel that comes as standard with the generating set. A MasterBus communication cable (15 mtr) as well as two terminating devices is included in the delivery

2.3.3 Documentation

Included in the delivery is:

- This users manual (number: 50261131)
- An installation manual (number: 50261141)
- An operating manual "MasterView Easy for Whisper generators" (number: 50200271).

Not included in the standard delivery but available as options are:

- Parts manual; number: 50200180
- Workshop manual; number: 50200170

However in this manual there is a list of important parts for maintenance and spare parts as well as a chapter on maintenance and problem solving.

2.3.4 Accessories included in the standard delivery

- Fuel filter
- Fuel lift pump
- Lifting eye
- Special hose connector for measuring exhaust backpressure (Refer to paragraph 5.4.3).

2.4 COMPONENTS

2.4.1 Main components to identify

1 Air inlet (bottom side);
2 Starter motor;
3 Battery connection (positive);
4 Battery connection (negative);
5 AC 230 V wiring;
6 MasterBus communication ports;
7 Fuel filter;
8 Fuel pipe inlet;
9 Fuel pipe return;
10 Bypass hose air vent;
11 Cooling water in;
12 Exhaust manifold (water cooled);
13 Thermo-switch exhaust;
14 Glow plug;
15 Injector;
16 Valve cover;
17 Decompression handle;
18 Oil filler cap;
19 Solenoid fuel valve;
20 Electric fuel lift pump;
21 Cooling water pump;
22 Oil pressure pump;
23 Fuel pressure pump
24 Oil pressure switch;
25 Oil sump pump;
26 Exhaust connection;
27 Fuel return;
28 Oil filler cap/ oil level indicator;
29 Digital Diesel Control Panel + local control panel;
30 Top cover plate connection box
31 Fuse 1;
32 Fuse 2;
33 Remote control cable;
34 Stop solenoid;
35 Oil strainer cover;
36 Start / Stop button;
37 Status LED's
38 RPM set screw;
39 Oil temp switch;
40 Plug screw;
41 Heat exchanger.

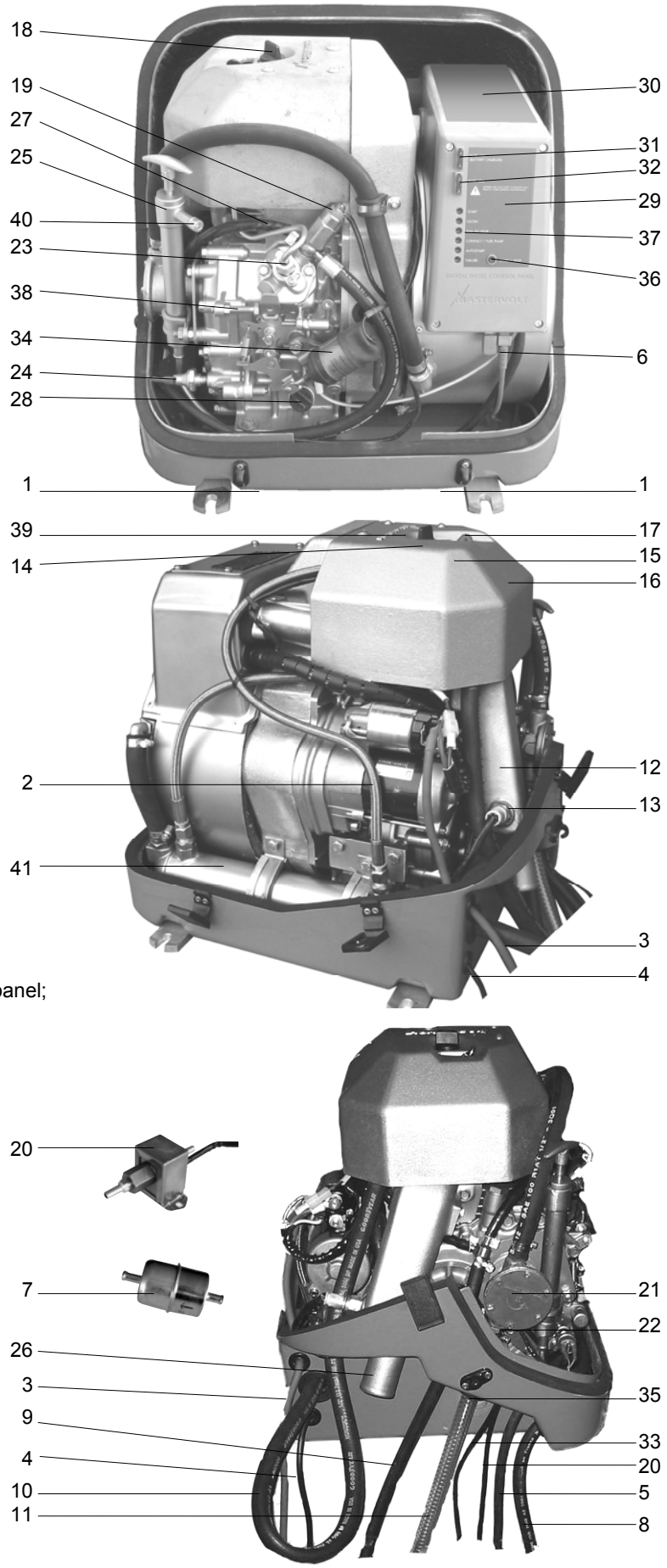

Figure 2: Overview Whisper 3.5.

Copyright © 2009 Mastervolt / December 2009 / WHISPER 3.5 / EN

2.4.2 Local control panel

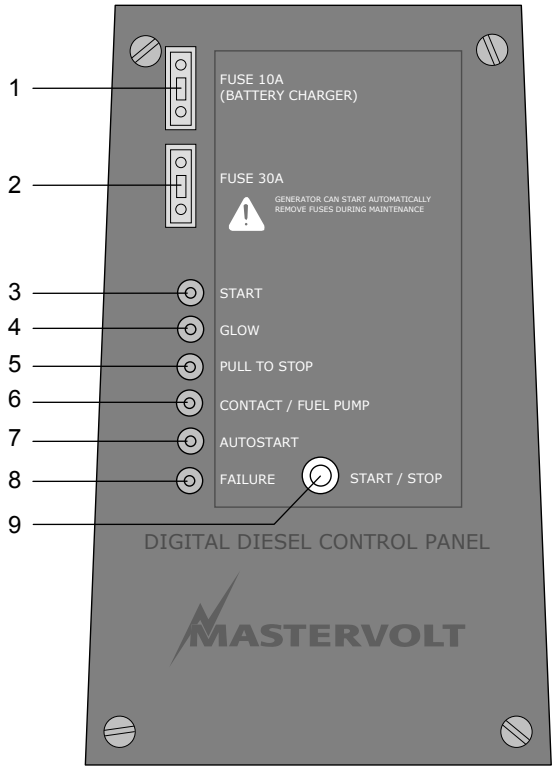

1	Fuse 10A	6	Contact / fuel pump LED
2	Fuse 30A	7	Autostart LED
3	Start LED	8	Failure LED
4	Glow LED	9	Start/stop button
5	Pull to stop LED		

Figure 3: Local control panel.

2.4.3 MasterView Easy remote control panel

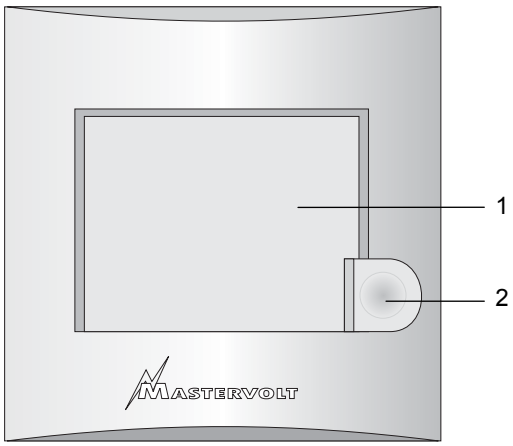

1 Touch screen Display
2 Display on/off

Figure 4: MasterView Easy remote control panel.

2.5 TECHNICAL INFORMATION

2.5.1 AC alternator

The single phase alternator is directly coupled, one bearing, brushless, rotating field design, two poles (3000 RPM) and self regulating.
Residual magnetism causes a small voltage over the stator windings and allows a current to flow in the windings, which is magnified because of the feed back effect between rotor and stator. The field windings in the rotor are short-circuited over a diode to rectify the current. A capacitor over an additional winding in the stator which is at an angle with the power-winding keeps the voltage stable within 5 % at the specified rpm and provides voltage fall off with speed, preventing over-excitation at low engine speeds and softening the effect of load switching to relieve the burden on the engine.
Further technical data on the design of the alternator can be found in drawings and diagrams in this manual.

2.5.2 Engine

The Whisper 3.5 generating set is based on the Kubota OC60 1 cylinder diesel engine. The engine is indirectly injected. The engine is oil cooled and the oil is cooled by a heat exchanger and raw water. The heat exchanger and all other parts which are in direct contact with the raw (sea) water are made of seawater resistant material like naval brass and gunmetal.
The engine has been specially adapted for the Mastervolt application and is very different from the standard engine supplied for industrial applications!

2.5.3 Control system

The standard electrical engine control system is 12 Volt negative earth, non earth return (ungrounded) is available as optional. Check your identification data to determine which system is applied.

The generating set can be operated by start/stop button on the local control panel on the alternator (see figure 3) or by a MasterBus compatible remote control panel such as the included MasterView Easy.

By giving a START command, the control system is activated and will start the engine automatically. Giving a STOP command will stop the engine and the electrical system will be deactivated. Stopping of the engine is executed by the ‘pull’ solenoid, at the same time the fuel valve solenoid will shut off.

The generating set is compatible with MasterBus, a fully decentralized data network for communication between the different Mastervolt system devices. The generating set as well as the rest of the electrical system can be

monitored and controlled by any MasterBus compatible remote control panel. The MasterView Easy is a MasterBus compatible monitoring and control panel that is standard included in the delivery of the generating set.

Refer to the separate operating manual of the MasterView Easy for operation instructions.

2.5.4 Battery charger

There is an extra winding in the alternator generating 4 Amp 12 V. This current is rectified to charge the battery. Both current and voltage are regulated.

2.5.5 Alarms and shut down

In the event of malfunctioning this will be indicated by the failure LED (see figure 3) details will be shown on the display of the MasterView Easy and the engine will be shut down. There are several functions guarded such as: oil pressure, oil temperature, exhaust temperature and output current.
All alarm switches are closed when no malfunction occur. A contact is cut in the event of an alarm. This means that the generating set will not work when the alarm switches are broken or there is a loose wire. The system therefore is intrinsically safe.

2.5.6 Fuel specification

The engine must only be used with diesel fuel which conforms to the standards for use in modern diesel engines. Fuel free from water and contaminants is of the utmost importance.

2.5.7 Oil information

1 Specification:
The oil must be suitable for oil changes as specified in the maintenance chapter. The Kubota engine must be run on heavy duty lubricating oil meeting the requirements of API class CC, CD, CF or CF_4.

It is very important to use the correct oil specification. Very often local oil suppliers recommend a higher class, because they assume that a higher class is allowed. This is not the case. One should not follow these recommendations.
Using the wrong specification will cause high oil consumption.

2 Oil viscosity:
We recommend a multigrade oil 15W40.

3 Oil capacity:
Excluding the oil cooler the content of the crankcase is 1,3 l. including the oil cooler it is 1,5 l.
Do not overfill with lubricating oil as this may have a detrimental effect on engine performance.

4 Oil pressure
- Minimum at idle 49 Kpa (0,5 kgf/cm2 - 7psi).
- Normal at 3000 rpm between 147 and 490 Kpa (1,5 up to 5 kgf/cm2 - 21 up to 71 psi).
- Minimum at 3000 rpm 98 Kpa (1,0 kgf/cm 2 - 14 psi).

Copyright © 2009 Mastervolt / December 2009 / WHISPER 3.5 / EN

2.5.8 Technical data

GENERAL	
Model	WHISPER 3.5
RPM	3000
Alternator	water cooled, synchronous
Engine	Kubota diesel, model OC60 (Japan)
Number of cylinders	1
Displacement	276 cm3
Bore X stroke	72x68 mm
Combustion air consumption	0.38 m3/min. at nominal RPM
Continuous power engine	3 kW nett
Cooling system	Indirect cooling by raw water.
Cooling water pump	PTO driven Mastervolt self priming impeller pump, type K
Fuel lift pump engine	electric pump (12 V DC), additional pump available upon request
Starting battery (optional)	55-90 Ah
Fuel consumption	0.7-1.4 litre/hour, load dependent
Control	Digital Diesel Control, controlled by MasterBus
Sound level (ISO 3746):	77.7 dB(A) (distance = 1 meter)

ELECTRICAL SPECIFICATIONS	
Output voltage	230V 50 Hz alternating current (AC) single phase
Output rating	3 KVA = 3 kW @ cos phi = 1
Voltage tolerance	± 5%
Frequency tolerance	± 5%
Alternator	brushless, two pole, synchronous

MECHANICAL SPECIFICATIONS	
Supply includes	generating set, built into tugged GRP sound shield with steel base frame, mounted on rubber anti vibration mounts
Dimensions WxDxH	505 x 400 x 500 mm
Colour	top white, bottom green
Weight	104 kg including sound shield
Max. installation angle	25 degrees
Standard supplies	MasterView Easy remote control panel, MasterBus connection cable (15m)
Optionalmobile	(vehicle) version, non earth return, spare part kits

2.5.9 DC wiring diagrams

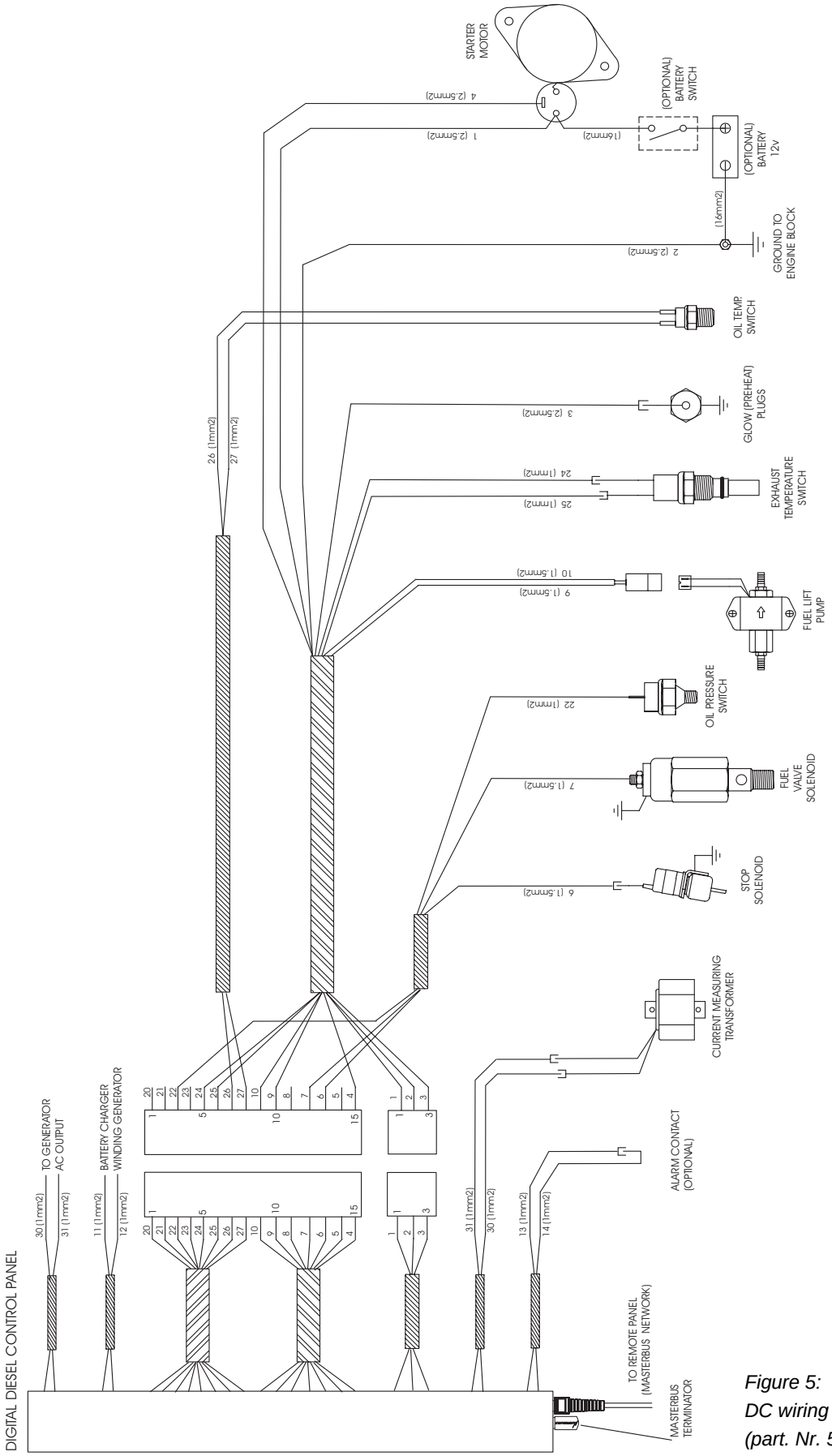

Figure 5:
DC wiring Whisper 3.5 grounded
(part. Nr. 51200500)

Copyright © 2009 Mastervolt / December 2009 / WHISPER 3.5 / EN

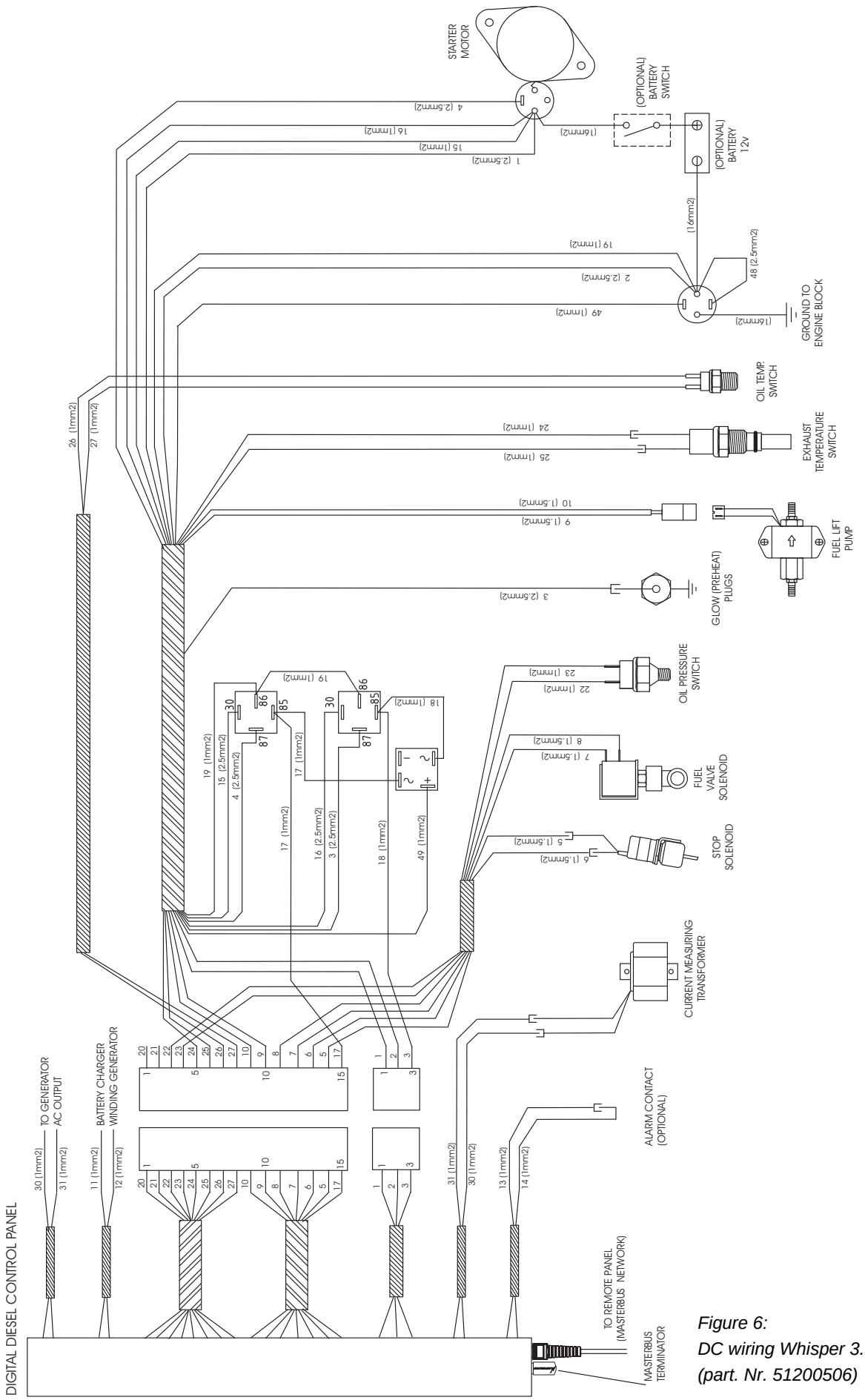

Figure 6:
DC wiring Whisper 3.5 ungrounded
(part. Nr. 51200506)

2.5.10 Wiring names and colours

Wire number	Wire name	Colour	Cross section
1	Battery +	White	2.5 mm²
2	Battery –	White	2.5 mm²
3	Glow +	White	2.5 mm²
4	Start solenoid +	White	2.5 mm²
5*	Stop solenoid –	White	2.5 mm²
6	Stop solenoid +	White	1.5 mm²
7	Fuel valve +	White	1.5 mm²
8*	Fuel valve –	White	1.5 mm²
9	Fuel pump +	Brown	1.5 mm²
10	Fuel pump –	Black	1.5 mm²
11	Charger a	White	1 mm²
12	Charger b	White	1 mm²
13	Safety switch +	White	1 mm²
14	Safety switch –	White	1 mm²
15*	Battery +	White	2.5 mm²
16*	Battery +	White	2.5 mm²
17*	Start relay +	White	1 mm²
18*	Glow relay +	White	1 mm²
19*	Battery –	White	1 mm²
22	Oil pressure +	White	1 mm²
23*	Oil pressure –	White	1 mm²
24	Exhaust temp. +	White	1 mm²
25	Exhaust temp. –	White	1 mm²
26	Engine temp. +	White	1 mm²
27	Engine temp. –	White	1 mm²
30	Iac1-L	White	1 mm²
31	Iac1-N	White	1 mm²
40	Uac1-L	White	1 mm²
41	Uac1-N	White	1 mm²
49*	Ground relay +	White	1 mm²
	Battery +	Red	16 mm²
	Battery –	Black	16 mm²
	Earth wire	Green/yellow	6 mm²

* Ungrounded versions only (part nr. 51200506)

Copyright © 2009 Mastervolt / December 2009 / WHISPER 3.5 / EN

2.5.11 AC wiring diagram 230 V AC / 50 Hz

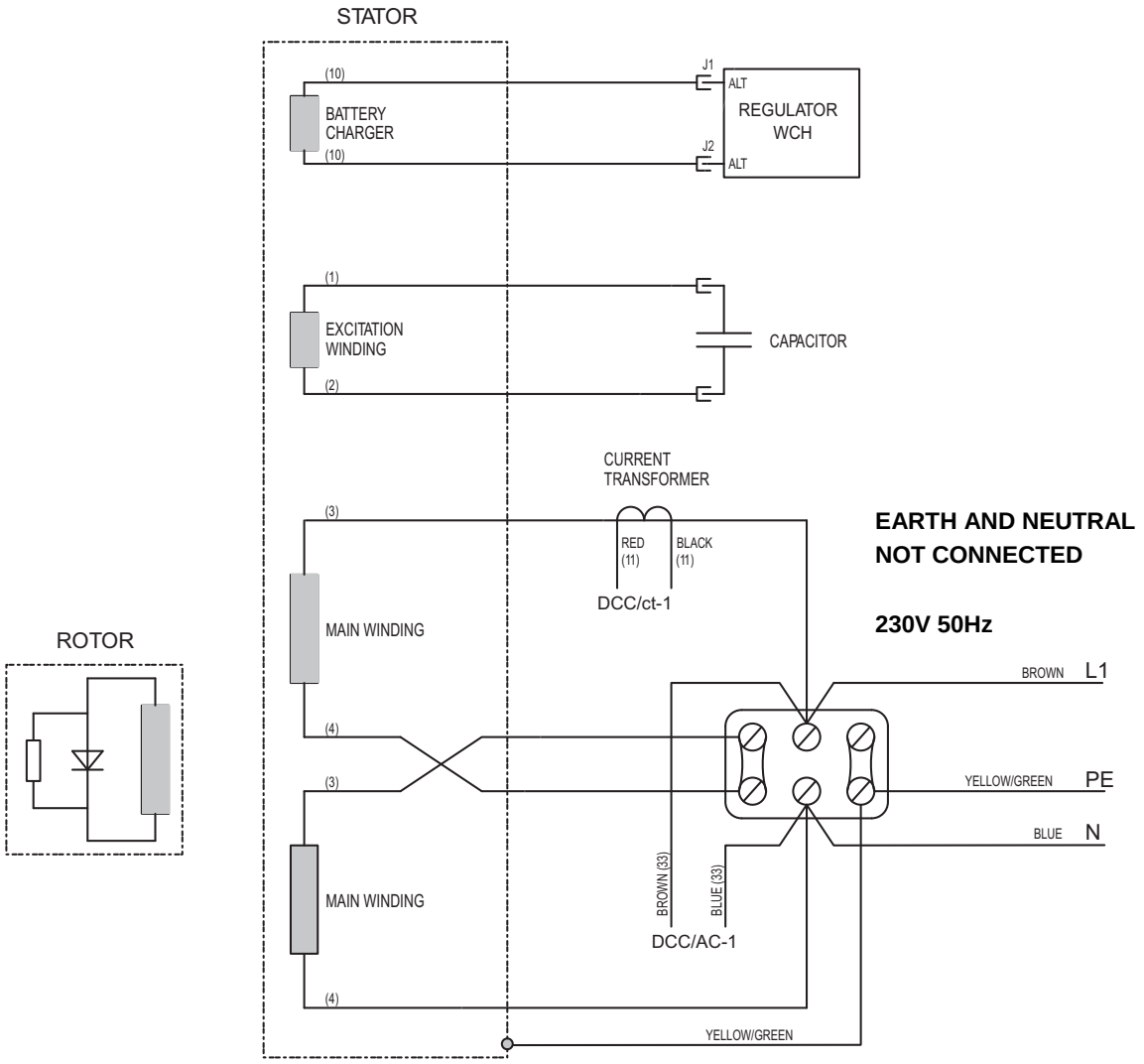

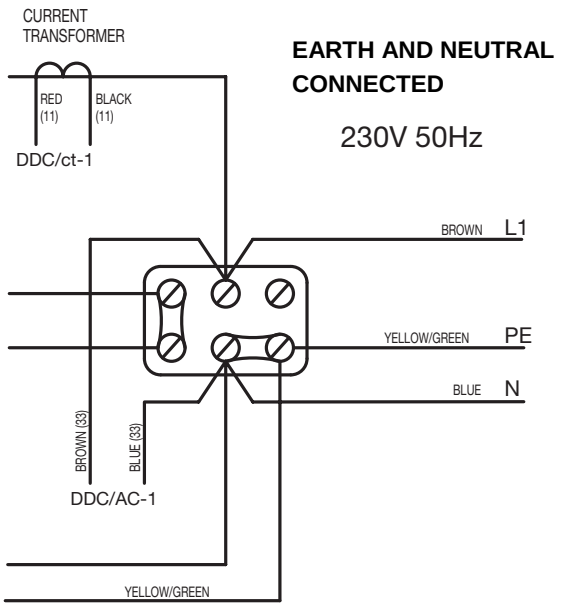

Figure 7 AC wiring diagram

3 OPERATION

3.1 GENERAL

The generating set is operational after full installation and filling up with: fuel, engine lubricating oil and cooling liquid, filling the starter battery with acid, connecting the battery to earth and connecting the MasterView Easy remote panel.

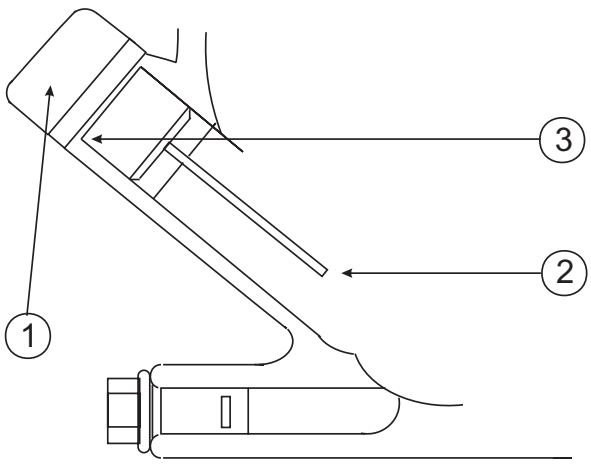

1 Filling cap
2 Minimum oil level
3 Maximum oil level

Figure 9

3.2 OPERATING INSTRUCTIONS

3.2.1 Summarised operating instructions (daily use)

Routine "pre-start" checks:

1 Check oil level (refer to figure 9).
2 Engine cooling system (all valves open).
3 Power source selector switch (off/shore power/generator power). Switch power source switch to "OFF", or switch off all consumers in the usual way. If a *Mass SystemSwitch* is installed, this operates automatically.
4 Switch on battery switch (when installed).
5 Fuel valve: open.

Starting:

To initiate the full automatic starting procedure, push the Start / Stop button on the Local control panel or give a start command by means of the MasterView Easy. You can monitor the procedure on the display of the MasterView Easy

In operation checks:

1 Check for abnormal noise or vibration;
2 Check the voltage;
3 Check sea water flow at exhaust outlet;
4 Power source selector switch (off/shore power/generator power). Switch to power source *Generator*. If a *Mass SystemSwitch* is installed, this operates automatically;
5 Before loading the generating set up to maximum, have it run warm. Continuous load should be restricted to 70 % of maximum load.

Stopping generator:

1 Switch off all electrical devices (consumers). If the generating set has been running under full load for a longer period, do not shut it down abruptly. Reduce the electrical load to about 30% of the rated load (i.e. 30% of 3 kW is approx. 1000W) and let it run for approx. 5 minutes.
2 Push the Start / Stop button on the Local control panel or give a stop command by means of the MasterView Easy.
3 Close the inlet sea water cock.
4 Switch to an other 230V power source, if available. If a *Mass SystemSwitch* is installed, this is done automatically.

Copyright © 2009 Mastervolt / December 2009 / WHISPER 3.5 / EN

3.2.2 Extended operating instructions

Check when starting the first time or after a longer period of rest:

1 If there is any damage caused by transport or installation.
2 Check if installation conforms to the installation instructions.
3 Ensure the generating set is free to turn without obstruction.
4 Check all hoses and hose connections for leaks.
5 Check all cables and cable end terminal connections.
6 Check the engine and generator mounting bolts.

Routine "pre-start" checks:

1 Check engine oil level.
The generator switches off in the event of insufficient oil-pressure. Even when the oil level is too low the oil pressure can be high enough. Do not run the generator with the oil below the lowest mark in the, because a smaller volume of oil will become contaminated considerably quicker than a larger volume. Therefore we recommend daily oil-checks.
Check oil level prior to starting the engine or at least 5 minutes after the engine has stopped.
2 Check sea water cocks. Do not forget the valve of the water outlet in case of a water/exhaust gas separator.
3 Check the water strainer.
4 Check for leaks.
5 Regularly check the siphon vent in the cooling water supply.
6 If no *Mass SystemSwitch* is used: Switch main Power Source Selector switch to "OFF" or switch off all devices.
7 Switch on the battery switch.

Starting the generator:

By pushing the Start / Stop button on the Local control panel or by giving a start command from the MasterView Easy, the electric system is activated, the fuel lift pump starts pumping and the starting procedure will begin. (The system is deactivated by pushing the Start / Stop button on the Local control panel again or by giving a stop command from the MasterView Easy)

The Whisper 3.5 can even be started with an almost discharged battery using the cylinder compression release handle. The engine can then be rotated easily ("turned over") as the valves are opened i.e. in the decompression position.

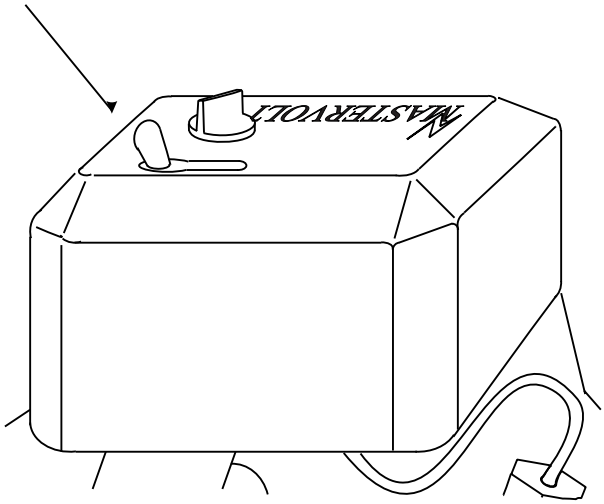

Figure 10: Decompression handle

You can also use the decompression handle to readjust the valve clearance and to fill the cooling system with anti freeze for conservation in winter time.

A restart protection prevents starting the engine when it is already running, which could cause damage.

In the event of starting problems (numerous attempts are made), close the sea-water inlet cock while cranking to prevent the outlet system and engine to fill up with water.

During the starting process, the cooling water pump is driven with the engine. The cooling water is discharged to the exhaust outlet, because the engine does not run, the exhaust pressure is not high enough to expel this water.
Open the valve directly when the engine starts to prevent damaging the impeller.
Water in the cylinder will cause serious damage to the engine. For instance; a bent piston rod or a cracked cylinder head. In fact water in the cylinder is the main cause for engine damage in pleasure craft.

Checks once the generator is in operation:

1 Check for abnormal noise or vibration.
2 Check the voltage.
3 Check coolant flow.
Always check immediately after starting the generator if cooling water flows at the exhaust outlet. If this is not the case, check the cooling water pump. After having become acquainted with the generator you will be able to recognise the coolant flowing through the system by listening for the noise of the water which is expelled.

Be aware that especially in harbours the coolant water inlet can easily be blocked by floating objects.

4 Power source selector switch (off/shore power/generator power). Switch to power source generator. If a *Mass SystemSwitch* is installed, this operates automatically.
Before loading the generating set up to maximum, have it run warm. The first 50 hours of running the continuous load should be restricted to 70 % of maximum load. Running for long periods at no load or light load in the first 50 hours can cause cylinder glazing and high oil consumption.

Engine load during longer operation:
Please ensure that the generating set is not overloaded. Overloading occurs when the electrical load (demand) is so high that the generator cannot be turned around properly by the diesel engine. Overloading causes the engine to run rough, while using oil and excessive fuel and producing soot by the exhaust. The engine can even stop.

The generator should therefore only be loaded at the maximum rated power for short periods (2-3 hours) only!

The high peak current is meant for the ability to start electrical devices that need a high current for starting especially electric motors and compressors (from a still stand state).
In order to prolong the generating set's life expectance, the nominal electrical demand on the system should be about 70% or the rated generating set's maximum load. Please note this when switching on your electrical devices!

Nevertheless, the Whisper 3.5 is designed so as not to overheat, even under extreme conditions.

Do not run the generator for very long periods at no load or at very low load. When this is necessary do load the generator at least one hour in 10 hours for minimum 70%. Long term running at too low load will cause the exhaust to be choked by carbon.

Never remove the battery while the engine is running or any electrical cable while the battery is connected in the circuit. Only disconnect the battery with the engine stopped and all switches in "OFF" position

Stopping the generating set:

1 Avoid stopping of the generator abruptly after a long period of operation at high load! Doing so, you avoid unnecessary thermal load to your generating set!
Act as follows:
Prior to switching off the generating set, decrease the generator load (i.e. turn off most electrical users) and let the generator run at low load for approx. 5 minutes to allow the engine to get properly cool (the influent sea water must flow through the system in order to cool the engine).

If the generator is operating in a hot environment and you do not act as given above, the excessive heat in the engine can trip the "high temperature" alarms. In that case, a restart of the engine is not possible for some time. It is also recommended to switch off electrical users prior to stopping the generator because of the voltage drop that occurs as the engine comes to a halt. Such voltage drops may cause damage to electric motors, compressors (in refrigerators or air conditioners etc.).

2 Push the Start / Stop button on the Local control panel or give a stop command by means of the MasterView Easy.

3 Close the inlet sea water cock.

4 Switch to an other 230V power source, if available. If a *Mass SystemSwitch* is installed, this is done automatically.

Copyright © 2009 Mastervolt / December 2009 / WHISPER 3.5 / EN

4 MAINTENANCE

4.1 ALTERNATOR

The alternator does not require any maintenance. Periodic inspection and cleaning is recommended, depending on environmental conditions.
However when the alternator has been idle for a long period attention to winding condition is recommended.
The condition of windings can be assessed by measurement of insulation resistance to earth.
The CAPACITOR should be disconnected during this test. A 500V 'megger' or similar instrument should be used. The insulation resistance to earth of all windings should be in excess of 1.0 MOhm. Should the insulation resistance be less than this value, drying out the generator windings is essential. Drying out can be carried out by direct warm air from a fan heater or similar apparatus into the generator air inlets or outlets.
All bearings are greased for life and not regreasable.

4.2 ENGINE

4.2.1 Preliminary instructions

All regular maintenance can be carried out when the enclosure is open. For repairs we recommend to take out the generating set to a workshop. The enclosure can be completely removed by taking out the bolts form the aluminium bars below the bottom of the capsule.
When oil and dirt have gathered in the enclosure measures have to be taken to avoid spilling oil and polluting the environment.

The first service on the engine should be carried out after 50 hours of its life. This also applies after a major overhaul. In the first 50 hours the engine should receive special attention:
Long periods of light or no load running in the first 50 hours may lead to cylinder glazing and high oil consumption.

For the same reason it is of the greatest importance to use the right oil specification

The first time starting up or after running out of fuel it could be necessary to prime the fuel system.

4.2.2 Bleeding fuel lines

Ensure there is sufficient fuel. The Whispers are self bleeding. Push the Start / Stop button on the Local control panel to activate the electric system and the fuel pump. When more time is needed to bleed, hold the Start / Stop button on the Local control panel pushed. Hold as long as necessary to bleed the system.

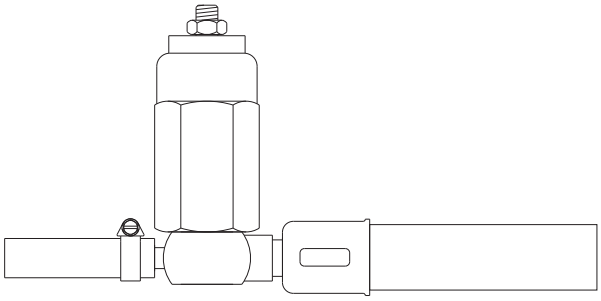

Figure 11: Self bleeding fuel lines

4.2.3 Valve clearance

Tightening torques, refer to § 5.4.2.
When the engine is in cold condition both valves should have a clearance between 0.14 and 0.18 mm. The adjustment has to be done at T.D.C. of the compression stroke. Using a pocket light one can check the position of the flywheel (refer to figure 12). By using the decompression handle one can crank the engine easily with a screwdriver to put the marks in line. Confirm that the valves do not move up or down when the crankshaft is turned about 20 degrees in normal and reverse direction of rotation. If the rocker arms move the piston is on the T.D.C. of the intake or exhaust stroke. In such a case turn the crankshaft 360° in the direction of engine rotation again. The piston is now at T.D.C. of the compression stroke. After readjustment one should crank the engine for 20 rotations and check the valves again.

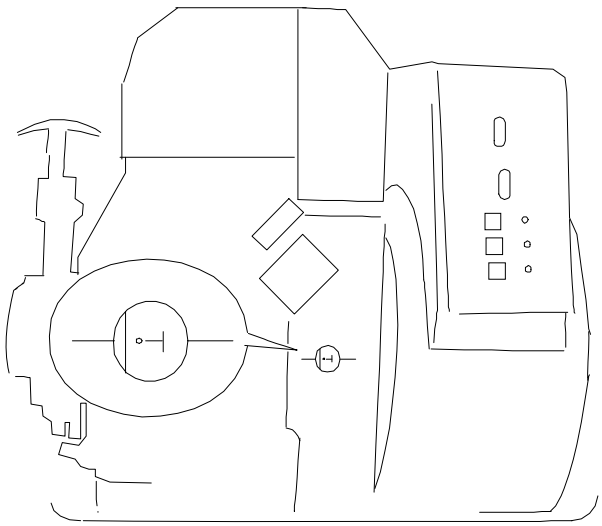

Figure 12: Valve clearance

4.2.4 Replacing fuel filter

Filter change depends on contamination of the fuel, but should be done however, at least every 1000 running hours. Before changing the filter, clamp off the supply line. Remove the hoses from filter and attach them on the new filter again. The arrow on the filter housing indicates the direction of the flow. A clogged filter results in a lack of output of the generating set.

4.2.5 Cleaning oil strainer

The oil strainer is behind a plug on the bottom of the engine. In the strainer is a magnet to catch the metal parts which are in the lubricating oil. Once per 1000 hours or when the oil is contaminated one can clean the strainer by washing it with petrol or a solvent. A green rubber plug in the capsule gives access to the strainer. Before taking out the plug one should sump the oil. Use tissues to avoid spilling oil in the capsule.

4.3 REGULAR MAINTENANCE

See operation manual of the remote control panel to reset the maintenance time counter after regular maintenance (except daily checks) was carried out.

CHECK DAILY:

- Oil level (see figure 13) Take care the oil level is never below the mark.
- Hoses for loose connections or deterioration.
- Water inlet filter.

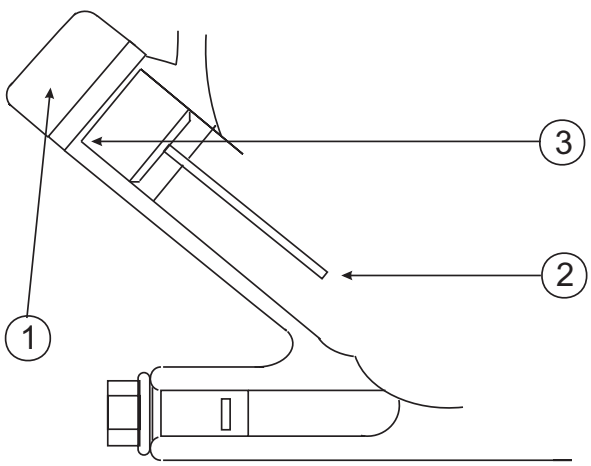

1 Filling cap
2 Minimum oil level
3 Maximum oil level

Figure 13

AFTER FIRST 50 HOURS:

- Change oil.
  Have the engine run until it is on temperature and stop it. Drain oil by the sump pump into a suitable retainer and fill up with fresh oil. Start the engine again and have it run for 5 minutes. Stop the engine again and pause for a few minutes to let the oil gather in the crankcase. Check the level again and add oil when necessary.
- Check and tighten nuts, bolts, and unions, paying particular attention to the fuel system.
- Observe the exhaust at the normal full load. The exhaust must be free from soot. Do not allow the engine to run with a dirty exhaust without investigating the cause as this may result in an expensive breakdown.
- Check siphon breaker valve or air vent on a regular basis. When the air vent it not working properly the engine can fill up with water by siphoning. Water in the combustion chamber causes serious damage to the engine.
- Check the electrical connections.

EVERY 150 HOURS:

- Change oil.
- Check the battery acid level (not applicable when Mastervolt batteries are used).
- Check battery terminals for corrosion
- Check impeller raw water pump (durability depends on the purity of the sea water. In sandy water and warm water wear will increase).

When replacing the impeller the gasket between the pump case and the cover should be replaced as well. So when ordering a spare impeller order a gasket as well. Remove the cover to get access to the impeller. Remove the old impeller with the help of two screwdrivers. Install the new impeller and add some grease. Turn the blades in the direction of rotation of the pump i.e. clockwise looking at the impeller.

EVERY 300 HOURS:

- Replace the impeller of the raw water pump.
- Check valve clearance.

EVERY 1000 HOURS:

- Replace the fuel filter
  Replacement depends on the condition of the fuel. We recommend replacement every 1000 hours. Isolate the fuel supply and change the element.
- Clean the oil strainer.

EVERY 2000 HOURS:

- Check lubricating oil pressure
- Clean and check or replace fuel injector nozzles and check injection pressure.
- Check the air filter element:

Copyright © 2009 Mastervolt / December 2009 / WHISPER 3.5 / EN

The air is taken in via the cover on the alternator. Below this cover is a spongy material which filters the air and holds some electrical components which are cooled by the inlet air. This filter does not require regular maintenance. Only in very dusty circumstances this filter should be cleaned. The spongy material can be washed in solvent or replaced.

- Check the cooling system:
  The engine oil is indirectly cooled by raw water via an oil cooler/ heat exchanger. The alternator is cooled by seawater which is pumped by the PTO driven impeller pump through the cooler elements in the generator housing. All parts of the cooling system are of corrosion free and seawater resistant materials such as brass and gunmetal. In case of gathering of dirt in the system it could be cleaned by compressed air. When overhauling the engine one could clean the parts thoroughly or replace.

When the generator set runs less than 100 hours a year the oil should be changed yearly

4.3.1 Maintenance schedule

Check oil level	daily
Check hoses for loose connections or deterioration	daily
Check water inlet filter	daily
Change oil and oil filter	after first 50 hours
Check and tighten nuts, bolts, etc.	after first 50 hours
Check exhaust	after first 50 hours
Check air vent	after first 50 hours
Check electrical connections	after first 50 hours
Change oil	150 hours
Check battery	150 hours
Check impeller water pump	150 hours
Replace impeller water pump	300 hours
Check valve clearance	300 hours
Replace fuel filter	1000 hours
Replace oil strainer	1000 hours
Check lubricating oil pressure	2000 hours
Check injector and injection pressure	2000 hours
Check air filter element	2000 hours
Check cooling system	2000 hours

4.3.2 Putting out of service

When not using the generating set for a longer period it is recommended to execute an engine preservation procedure.

1 Clean the engine.

2 Loosen the fuel suction pipe and fuel return and put them in a can with preservation diesel fuel. Start the engine and run the engine warm.

3 Drain the hot engine oil and refill with preservation oil.

4 Stop the engine and loosen the inlet of the raw water pump. Drain the water from the water lock. Lift the valves by the decompression handle to avoid the engine from starting and crank the engine having the raw water inlet sucking anti freeze from a can until the pump, heat exchanger and manifold are full.

5 Disconnect the battery and store it in a place free of frost and dry and charge it regularly.

6 Close inlet- and outlet openings with tape.

7 Protect the generating set against the influences of bad weather conditions.

This method of preservation will be sufficient for 6 months. Repeat steps 2, 3, and 4, every 6 months. Change oil before using the engine again.

5 TROUBLE SHOOTING

5.1 ALTERNATOR/ ELECTRICAL FAULTS

Beware of parts which are live!

Before working on the generator, remove the 30Amp fuse from the local control panel (see figure 3) to prevent the engine from starting

5.1.1 General

If any problem should occurs, check basic conditions and examine all external wiring, switch gear and circuit breakers. Also check if measuring instruments give the correct value. If in doubt, measure directly on the alternator terminals with an independent instrument. This should only be carried out by an experienced electrician.

Check if the engine is running correctly at 3000 (50 Hz) RPM according to its settings and does as well under load. A RPM drop of 5% at full load is acceptable. Therefore a no load setting should be at 3150 RPM = 52.5 Hz. Under no circumstances should the RPM under full load be below 2940 RPM = 49 Hz
When the problem is in the RPM refer to section 5.2.

When the generator was stopped due to an electrical failure, the origin of the failure that stopped the generator will be displayed on the MasterView Easy remote control panel. See section 5.1.2.
See section 5.1.3 for other electrical faults

Copyright © 2009 Mastervolt / December 2009 / WHISPER 3.5 / EN

5.1.2 Failure or warning messages displayed on the remote control panel

AC warnings and failures	Meaning	What to do?
No failure	None (no failure detected)	--
UAC Low	Generator output voltage too low	See section 5.1.3,
UAC High	Generator voltage too high	See section 5.1.3,
IAC High	AC output current is too high	Reduce connected load or see section 5.1.3,
FAC Low	AC output frequency is too low, engine speeds is too low.	See section 5.2.3.
FAC High	AC output frequency is too high, engine speed is too high.	See section 5.2.3.
Overload	Too much load connected to the AC output of the generator	Reduce connected load or see section 5.1.3,

DC warnings and failures	Meaning	What to do?
No failure	None (no failure detected)	--
UDC Bat low	Battery voltage of the starter battery is too low (flat battery),	Check battery voltage. Recharge the battery, check battery charger. Inspect battery terminals and cables for a good electrical connection (inspect against corrosion, tattered wires, etc.)
Charger failure	Defective charger, charger fuse blown	Check battery charger, check charger fuse
Charger temp.	Internal temperature of battery charger circuit on local control panel too high	Check battery charger
IDC Fuel high	DC current through the fuel lift pump was too high	Check fuel lift pump, check fuel valve. Check for short circuit in wiring
IDC Stop high	DC current through the pull to stop relay was too high	Check pull to stop relay. Check for short circuit in wiring
IDC Glow high	DC current through the glow plug was too high	Check glow plug. Check for short circuit in wiring
IDC Start high	DC current through the start solenoid was too high	Check start solenoid. Check wiring to start solenoid. Check for short circuit in wiring
UDC Fuel high	DC voltage to the fuel lift pump was too high	Check whether no external DC source is connected to wiring to the fuel lift pump.
UDC Stop high	DC voltage to the pull to stop relay was too high	Check wiring to of pull to stop relay.
UDC Glow high	DC voltage to the glow plug was too high	Check whether no external DC source is connected to wiring to the glow plug.
UDC Start high	DC voltage to the start solenoid was too high	Check whether no external DC source is connected to wiring to the start solenoid.
UDC Fuel low	DC voltage to the fuel lift pump was too low	Check for short circuits in the fuel lift pump, check for short circuits in the wiring.
UDC Stop low	DC voltage to the pull to stop relay was too low	Check for short circuits in the pull to stop relay, check for short circuits in the wiring.
UDC Glow low	DC voltage to the glow plug was too low	Check for short circuits in the glow plug, check for short circuits in the wiring.
UDC Start low	DC voltage to the start solenoid was too low	Check for short circuits in the start solenoid, check for short circuits in the wiring.

5.1.3 Other electrical problems

Problem	Possible cause	What to do?
No output (Voltage) at all	• Circuit breaker "off" or faulty fuse	Check switches and fuses and measure directly on the alternator to exclude external causes.
	• Low engine RPM.	Check the engine RPM and adjust (refer to special procedures).
	• Loss of residual magnetism.	Check the residual magnetism and flash the alternator (refer to special procedures).
	• Capacitor loose or broken.	Check by independent excitation if the problem is in the capacitor or in the windings.
	• Rotor diodes broken.	Check the diodes in the rotor (refer to special procedures) The Whisper 3.5 has two diodes in the rotor. It happens very rarely that both are broken. When only one diode is broken the voltage will be low but will not varnish completely.
Generator output voltage too low when no load is on it (less than 210V).	• No load at all or very low load.	Switch on a load and check voltage.
	• Engine is not reaching the rated RPM.	Refer to special procedures to readjust RPM.
	• Defective capacitor.	Check capacitor and replace if necessary (refer to special procedures).
	• Defective diode (one of the two)	Check the diodes in the rotor and replace (refer to special procedures).
Generator output voltage too low under load (less than 210V). In no load condition it is ok	• Generator is overloaded.	Switch off a load; (part off) consumers.
	• Engine is not reaching the rated RPM.	Refer to engine RPM problems
	• Defective capacitor	Check capacitor and replace if necessary (refer to special procedures).
Generator voltage too high, (more than 245V)	• Engine is running too fast (RPM too high).	Check engine speed and adjust (refer to special (more than 245V).procedures).
	• Over-energising due to defective capacitors	Check capacitor specification and replace capacitors if necessary.
	• Presence of a strong capacitive load (leading power factor)	Compensate for this capacity and seek for experts advice.
Generator voltage fluctuates.	• Disturbances on the electrical system/ user side.	Check if electrical load is fluctuating
	• Engine runs irregularly.	When engine runs irregularly refer to section: "Engine runs irregularly".
Generator is not able to start an electric motor	If the generator is unable to supply enough power to start an electric motor (230V), this is usually because this motor draws too much current during starting	Check the electric motor's current draw required for starting. This should not exceed 70% of the rated generator output current. This could be remedied by providing stronger capacitors to the motor or using a "soft-start". Inquire at your nearest Mastervolt dealer or directly at the manufacturer, Mastervolt in the Netherlands.

Copyright © 2009 Mastervolt / December 2009 / WHISPER 3.5 / EN

5.2 ENGINE FAULTS

Before working on the generator, remove the 30Amp fuse from the local control panel (see figure 3) to prevent the engine from starting

5.2.1 General

Most electrical problems relating to Voltage or Frequency are due to wrong engine speed. Note that RPM and Hz are basically the same.
Use the problem solving tables to find the cause. When there is no obvious cause one can adjust the RPM (refer to special procedures).

When the engine is not cranking well starting problems almost always originate from battery problems or poor battery cable connections. When the engine is cranking, well starting problems almost always originate from lack of fuel or air bubbles in the fuel pipes.

When the engine does not start instantly, prolonged cranking can fill up the exhaust system with cooling water because of the water injected exhaust. When the water enters the cylinder through the valves this will bring severe damage to the engine. When the engine does not start and repeated cranking is necessary shut off the seawater inlet. Open the valve immediately after the engine has started.

When the generator was stopped due to a engine failure, the origin of the failure that stopped the generator will be displayed on the MasterView Easy remote control panel. See table section 5.2.2.
See section 5.2.3 for other engine related faults

5.2.2 Failure or warning messages displayed on the remote control panel

Engine warnings and failures	Meaning	What to do?
No failure	None (no failure detected)	--
Service needed	Time to service interval has elapsed.	Generator needs maintenance, see chapter 4 of this manual
Oil pressure low	Oil pressure too low (oil pressure switch tripped)	See section 5.2.3
Engine temp high	Engine temperature too high (engine temperature switch tripped)	See section 5.2.3
Exhaust temp hi	Exhaust temperature is too high (exhaust temperature switch tripped)	See section 5.2.3
Water pressure	Water pressure too low, water pressure switch tripped	See section 5.2.3
Communication	Communication error between the generator set and the apparatus that gave a command which resulted in starting of the generator set. For instance connection between the generator set and the MasterView Easy was lost.	Check MasterBus wiring between generating set and remote panel. See user's manual of the remote control panel
Start failure	Engine fails to start.	See section 5.2.3
Not configured	No serial number was assigned to the generator set. This may mean that calibration of the generator fails.	Contact your supplier.

5.2.3 Other engine related problems

Problem	Possible cause	What to do?
Diesel engine fails to crank, the starter makes clicking noises, or the engine cranks very slowly	• Almost certainly this is an electrical problem. The remote control panel will indicate a failure code related to the DC voltage (see 5.1.2) • One other possibility is that the engine is locked by water in the cylinder or there is other severe damage.	Check on water in the cylinder and further damage by cranking while lifting the valves with the decompression handle. When there is water in the cylinder, then deactivate the control system, disconnect the battery, remove the glow plug. Crank the engine to remove the water through the opening of the glow plug. Check oil on the presence of water and change oil. Find out how the water entered the cylinder (check the air vent). Take precautions to prevent it from happening again. When there is no mechanical malfunction the problem must be an electric malfunction.
	• Starter battery switched "OFF".	Check position of the battery switch and switch "ON".
	• Starter battery voltage insufficient (battery too weak).	Check battery voltage. Recharge the battery. Inspect battery terminals and cables for a good electrical connection (inspect against corrosion, tattered wires, etc.)
	• Wiring control system faulty	During the normal starting process, the battery voltage drops to 11V (with a fully charged battery). If the voltage does not drop during starting, the electrical connection is faulty. If the battery voltage drops lower than 11V, then the battery has been discharged too deep.
	• Starter broken	Repair the starter motor
	• To thick engine lubricating oil.	Change oil for a lower viscosity.
Starter is turning engine smoothly, but engine fails to start	• Out of fuel or faulty fuel, water in the fuel.	Fill up with fuel or replace with better quality.
	• Fuel solenoid is not opening (no “click” can be heard).	Check wire connections and circuitry to solenoid. (Refer to DC wiring diagram)
	• Fuel lift pump is not working. • Fuel filter is blocked. • Air in fuel lines.	Check fuel filter and fuel lift pump: clean or replace if necessary. Bleed air from fuel system (refer to maintenance section).
	• Wrong valve clearance.	Adjust valve clearance,
	• Low compression because of dirty valves.	Clean valves. Take off the injection bent and inspect the outlet port. When little rust in the port clean the valve by taking off the valve spring and rotate until rust is removed. When the outlet port is strongly affected by rust, the exhaust system is not properly installed (refer to paragraph 5.4.3). Contact Mastervolt service department for advice.
	• Blocked injector.	Have the injector tested and cleaned if necessary.
	• Loss of compression by wear out or damage	Repair by Mastervolt service
Engine runs irregularly.	• Unsuitable contaminated fuel • Lack of fuel.	Fill up with fuel or replace by better quality.
	• Choked fuel filter.	Check fuel filter and fuel lift pump: clean or replace if necessary.
	• Disturbances on the electrical system/ user side.	Check if electrical load is fluctuating
	• Faulty fuel lift pump.	Check and repair
	• Choked air filter. • Lack of air.	Check the air intake
	• Choked exhaust system, exhaust chocked rubber exhaust hose kinked.	Check the exhaust hose

Copyright © 2009 Mastervolt / December 2009 / WHISPER 3.5 / EN

Problem	Possible cause	What to do?
	• Air in the fuel pipes	Bleed air from fuel system (refer to maintenance section).
	• Blocked injector.	Have the injector tested and cleaned if necessary.
	• Wrong valve clearance.	Adjust valve clearance.
	• Temporarily hunting (this will disappear when engine has run in).	
Engine speed drops	• Too much oil.	Drain oil to proper level.
	• Lack of fuel.	Check fuel supply system: fuel pump and filter.
	• Lack of intake air.	Check air intake.
	• Choked exhaust system, exhaust blocked, rubber exhaust hose kinked.	Check exhaust system.
	• Generator overloaded	Reduce the electrical load (switch off some consumers).
	• Generator over energised.	Check that the proper capacitor type is installed and that it is connected correctly.
	• Defective generator (windings, bearings or other)	Generator must be sent to manufacturer for repair of damaged bearing or winding.
	• Damaged engine	Repair by Mastervolt service
Engine does not stop on command	• Loss of control	Faulty Local Control Panel. Stop the engine manually by the stop handle. Check wire connections to stop solenoid. Check solenoid valve function. Replace if necessary.
Engine exhaust smokes	• Faint blue smoke - generally the result of light load	Increase load.
	• Heavy blue smoke - caused by lubricating oil: Overfull oil sump or worn cylinder bore, stuck broken or worn rings.	Check the oil level. Check the compression.
	• Black smoke –incomplete combustion caused by: Overload, choked air filter, inlet temperature too high, unsuitable fuel or water in fuel.	Check the fuel . Check for overload.
Engine starts, but stops after 10 up to 30 seconds	• Protection system stops the engine; this can be caused by oil pressure failure, lack of cooling water (exhaust temperature alarm). Overload, loose wire or faulty alarm switch.	Display on MasterView Easy Panel will help to indicate failure. See section 5.2.2.
Engine stops by itself	• Overload or short circuit.	Switch off the consumers and test for short circuit.
	• Lack of fuel.	Check fuel supply system: fuel lines, pump, filter, valves, tank level, etc.
	• Oil pressure low. (oil pressure switch tripped).	Check oil level. Check engine's oil pressure and have it repaired by Mastervolt.
	• Excessive heat in cooling system (thermo-switch tripped). • Lack of cooling water (exhaust switch tripped). • Impeller broken. • Cooling water blocked. • Water strainer blocked. • Air or water in the fuel. • Blocked air or fuel filter.	Check cooling water system flow: water pump, inlet water filter, coolant flow.
	• Loss of compression by wear out or damage.	Repair by Mastervolt service.
	• Thermostat faulty	Check thermostat and replace
Sooty, black exhaust.	• Generator is being overloaded. MasterView Easy Panel will indicate "IAC High" or "Overload".	Check electrical load and switch off some consumers
	• Insufficient intake air. • Choked air filter.	Check intake air paths and filter, clean and replace if necessary.

Problem	Possible cause	What to do?
	• Fuel injector faulty.	Replace injector.
	• Valve clearance incorrect.	Readjust valve clearance
	• Poor fuel quality.	Use better quality diesel.
	• Poor quality lubricating oil.	Use better quality oil.
	• Continuous running with very low load.	Increase load and have the engine run for a few hours
Loss of power	● Wrong measurement. Check if the load is measured correctly. Does the Amp meter show the correct value? When calculating the load by multiplying voltage and amps this should be done by using the exact values, taking into account the power factor of the consumers. When any doubt, measure the power directly with an appropriate instrument.	
	• Overfull oil sump.	Bring the oil to the correct level
	• Choked fuel filter.	Replace the fuel filter.
	• Choked air filter.	Check air inlet openings; clean air filter.
	• Exhaust blocked.	Check the exhaust system.
	• Injector blocked.	Have the injector checked.
	• Loss of compression, sticking.	Have the compression measured.
	• damaged piston ring.	Clean or replace the rings.
	• Wear out of cylinder.	Have the compression measured and have the engine overhauled.
Over-temperature	• Overload.	Take away the overload.
	• Low oil level.	Fill up with oil.
	• Water inlet system blocked. • Broken impeller. • Water strainer choked • Heat exchanger choked.	Check the cooling system thoroughly.
	• Faulty thermostat	Check the thermostat or replace.
Engine stops very slowly	• Engine should stop within 20 seconds	Stop solenoid is faulty and engine is stopped by after pushing stopping button fuel shut off valve

5.2.4 Warnings

Generator must be shut off immediately if:

- Motor RPM suddenly rises or drops.
- Unusual noise comes from generating set.
- Exhaust gases suddenly colour dark.
- Display of the MasterView Easy shows a warning

5.2.5 Service address

If you cannot correct a problem with the aid of the malfunction table, contact your Mastervolt Service Centre or Mastervolt Amsterdam for an extended service list, tel: INT +31-20-3422100.

Copyright © 2009 Mastervolt / December 2009 / WHISPER 3.5 / EN

5.3 SPECIAL PROCEDURES ALTERNATOR

5.3.1 Residual voltage check / excitation procedure

When residual magnetism disappears there is no residual voltage. Residual magnetism can disappear after the generating set being out of service for a long period or suffered a short circuit. This can be solved by charging the capacitor ("flashing") independently with a small 9 Volt battery. This can be done while the engine is stationary and the wiring is connected.

If the generating set battery is used for flashing one must take care. A short circuit can cause heavy sparking, fire and injuries

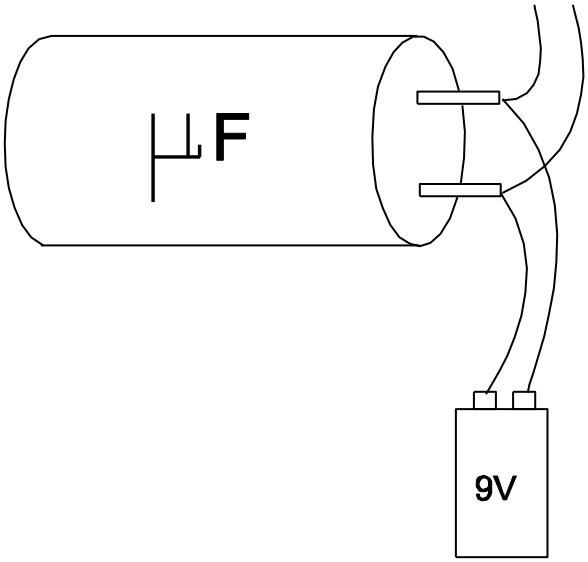

Figure 14

When flashing does not bring back voltage, the capacitor(s) should be renewed. When this does not help, the rotating rectifier diodes should be tested and a winding resistant test should be executed.

5.3.2 Testing rotary rectifier diodes

The diodes in the rotor can be checked with a multimeter. When both diodes are faulty the alternator will not generate any voltage. When only one diode is faulty the alternator will generate about half the normal voltage. The flexible lead connected to the diode should be disconnected at the terminal end, and the forward and reverse resistance checked. A healthy diode will indicate a very high resistance (infinity) in the reverse direction, and a low resistance in the forward direction. A faulty diode will give a full deflection reading in both directions with the test meter on the 10,000 ohms scale, or an infinity reading in both directions. The problem can also be in a faulty surge suppressor which is a metal-oxide varistor connected across the diodes, or the ESD capacitor. Replace the diodes, the suppressors and the capacitors.

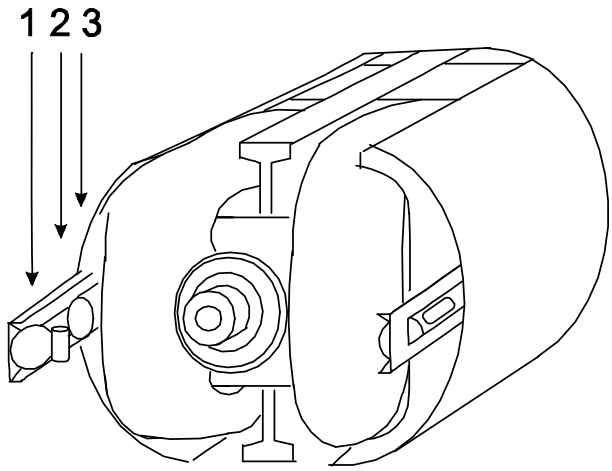

1 Varistor (420V);
2 EMC capacitors (4,7nF - 630V);
3 Diodes (25A - 1200V).

Figure 15

5.3.3 Winding resistant values

If after establishing and correcting any fault on the capacitor and diodes output is still low when separately excited, then the main rotor, stator and exciter stator winding resistance should be checked as the fault must be in one of these windings. The respective leads must be disconnected before taking the readings.

Resistance values should be within 10% of the values given in the table below:

Resistance	50Hz
• Resistance both main stator windings in series	1.2 Ohm
• Resistance both rotor windings	2.1 Ohm
• Resistance battery charger winding	0.15 Ohm
• Resistance exciter stator winding	2.4 Ohm

5.3.4 Meggering

One can try to measure resistance between the housing and the windings with a multimeter which should read infinity. When readings are infinity but a fault is suspected one can do a high voltage resistance test (MEGGERING) This procedure should be carried out by an expert

5.4 SPECIAL PROCEDURES ENGINE

5.4.1 Setting the RPM

RPM is set by the manufacturer and should not need readjustment! However a very slight offset after running in could occur. RPM can be measured by a frequency meter. Before readjustment check any other explanation for the wrong speed. Engine speed is set at the factory at nominal 3000 (50 Hz) RPM. A RPM drop of 5% at full load is acceptable. Therefore a no load setting should be at ± 3150 RPM = 52.5 Hz. Under no circumstances should the RPM be under full load below 2940 RPM = 49 Hz. When no cause can be found for a wrong speed, the setting can be adjusted: It is very important to identify the correct setting assembly (refer to fig. 16).The screw is to be locked in position with the lock-nut.

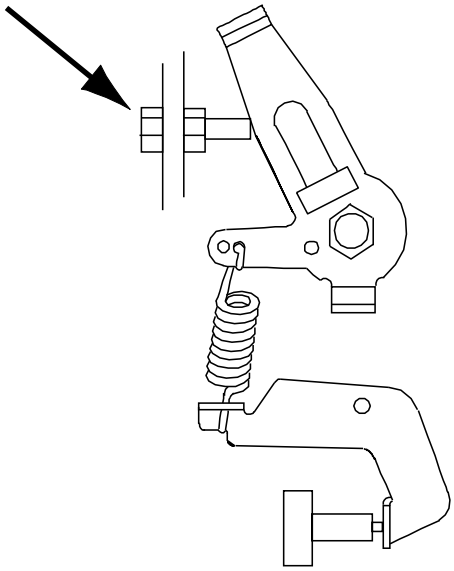

Figure 16: Setting assembly

5.4.2 Tightening torques

Valve clearance, refer to Maintenance, §4.2.3.
Cylinder head screws M10x1,5:
51,9 to 56,8 Nm; 5,3 to 5,8 kgf-m.
Rocker arm bracket mounting: M8 x 1,25:
23.5 to 27,4 Nm; 2,4 to 2,8 kgf-m.

5.4.3 Measuring exhaust backpressure

The exhaust system must be of adequate size -1 5/8”/ 40 mm no more-no less -and maximal length (refer to installation manual). This is true for all generators, but specially for the Whisper 3.5, because this small engine has a small gas flow that easily can be blocked by a water trap in the exhaust system. When any doubt; backpressure has to be measured. An easy way to measure for back-pressure is to use a water column. A water column can be made visible in a plastic tube along a yardstick and fitting the end to a hose connection to fit in the adaptor on the injection bent after removing the exhaust temperature switch. The bent A hanging down should not be to short helping to damp the pulsating effect of the gas discharge that is characteristic for a one cylinder engine. The water column should be no more than 24 inches (60 cm.) of water (0,87 PSI - 0,06 bar)

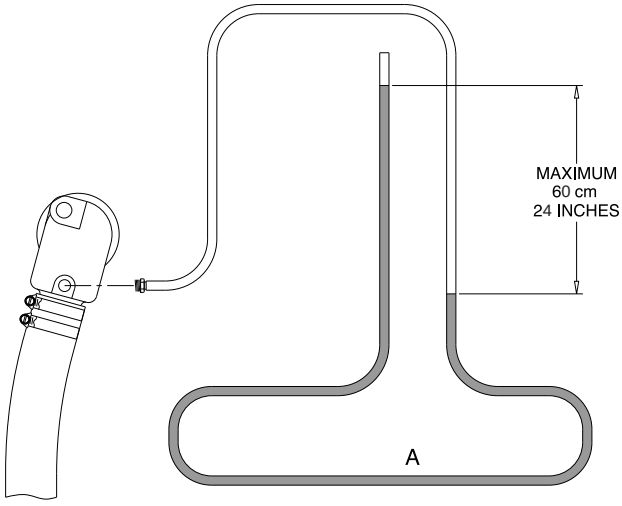

Figure 17: Measuring exhaust backpressure

Copyright © 2009 Mastervolt / December 2009 / WHISPER 3.5 / EN

5.4.4 Disassembling instructions

It could be necessary for repair or checks to disassemble the generating set. One can take off the white cover easily for regular maintenance and inspection. For further repair or inspection one can take off the upper green part as well. Following instructions will help:

1 When the generating set has to be taken out of its enclosure we strongly advise not to do this in a narrow space on a boat, but to take out the complete set and take it to a workshop.

2 To take out the generator all connections have to be taken off. The outgoing hose on the oil cooler is most difficult to get to, but can be reached from above by taking off the cover which is on the cylinder head of the engine. By taking out 4 screws from the aluminium bars the generating set will come loose from the capsule.

3 The easiest way to get the generator out of its capsule is by lifting the set using the lifting eye and removing the capsule downwards.

4 The cooler elements are welded to the alternator housing with silver and cannot be disassembled. How-ever one can take off the complete alternator housing.

5 Before the alternator can be taken off one has to take out the fitting to the oil cooler to be able to take off the aluminium housing. All cables and wiring have to be loosened first.

6 The rotor can be taken off by removing the bolt which goes through the shaft (normal clockwise threaded). The end of the shaft is specially threaded to push off the rotor from the conic stub shaft, which is on the flywheel, using a 6-mm rod of 165-mm length and a M10 bolt.

7 Reassembling the generating set one should take care of alignment, cleaning the surfaces between engine and alternator and tighten the bolts crosswise and gradually.

8 Use Loctite 577 to seal the fittings, which should first be cleaned and made free of oil and grease. Test the generating set first outside its capsule and check very carefully for leakages before putting it back in its enclosure.

6 SPARE PARTS LIST

A parts manual in English is available as an option; number: 50200180(***).
A work shop manual in English is available as an option; number: 50200170(***).

We recommend the following spares for service and maintenance.

- Kit A: parts for regular maintenance parts marked(*) article no: 50201260
- Kit B: parts for maintenance + spare parts: all parts marked (*)+(**) article no: 50201261
- Kit C: parts for "world travellers" all parts marked (*)+(**)+(***) article no: (upon request)

ARTICLE NO	DESCRIPTION
50209030	Fuel filter (*)
50201031	Fuel lift pump (**)
50201051	Fuel valve solenoid (**)
50221609	Banjo eye fuel valve (**)
50201034	Copper washer connection bolt, M10 x 16 (**)
50201035	Copper washer, M12 x 18 (**)
50202048	Stop solenoid (***)
50201240	Raw water pump complete Mastervolt type K (***) (refer to fig. 17)
50209011	Impeller (50209013) + gasket (50209012) (*)
50201029	Cover type K (**) (50201029)
50209018	Bolts cover (**) (50209018)
50201251	Pump repair kit A consisting of: Shaft (50201011), Bearings (2 pcs.) (50209014), O-ring (50209017), - Seals (2 pcs.) (50209015), Clips (1 set) (2x 50209019, 1x 50209016)
50209010	Pump repair kit B (**)(same as repair kit A excluding the shaft)
50201220	Oil cooler complete with appendages (***)
50201225	Oil pipes and fittings (***)
50201222	Water hoses with clamps (***)
50201060	Capacitor xx micro-farad (**) xx = give value when ordering
50209132	Measuring coil (***)
50201290	Rotary diodes (2 pcs) (including varistors and capacitors (**)
50201085	Alternator bearing including O-ring (**)
50209150	Digital Diesel Control unit / Local control Panel on the engine (Whisper 3.5 - MasterBus) (***)
50212170	Fuse 10 Amps (*)
50212175	Fuse 30 Amps (*)
50201069	Wiring loom complete (Whisper 3.5 - MasterBus) ***
77010300	MasterView Easy Remote Control panel (***)
77041500	MasterBus cable, 15 mtr. (***)
77040000	MasterBus terminating device (***)
50202034	Gasket valve cover (**)
50202030	Cylinder head gasket kit
50202036	Overhaul gasket kit + seal kit (***)
50202040	Glow plug (**)
50202050	Nozzle injector (**)
50202160	Fuel pump (high pressure) complete (***)
50209051	Silicone O-ring sound shield cover (*)
50202015	Starter motor K – for CCW rotating engine

More extensive parts list on the internet: MASTERVOLT.COM (fast moving parts)

Copyright © 2009 Mastervolt / December 2009 / WHISPER 3.5 / EN

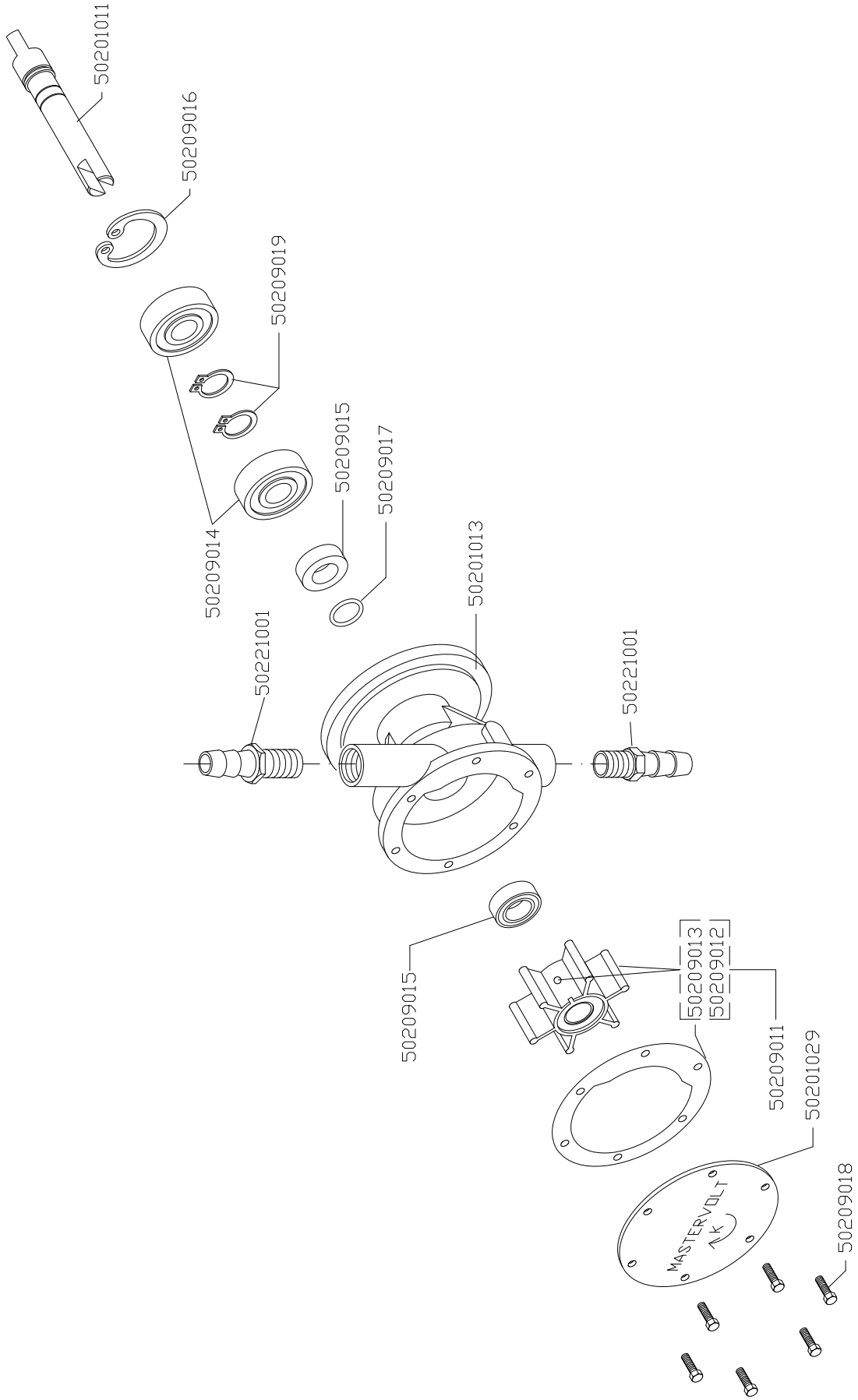

Figure 18: Waterpump type K

MAINTENANCE LOG

first service after 50 hours:	hour counter:	remarks
next service (every 150 hours)	hour counter:	

Copyright © 2009 Mastervolt / December 2009 / WHISPER 3.5 / EN

NOTES

NOTES

Copyright © 2009 Mastervolt / December 2009 / WHISPER 3.5 / EN

NOTES

MASTERVOLT

Snijdersbergweg 93, 1105 AN Amsterdam, The Netherlands
Tel : + 31-20-3422100 / F ax : + 31-20-6971006
www.mastervolt.com / info@mastervolt.com